BLAFINK

Cascade headboard

Cascade headboard configurations

Featuring a tiered arch silhouette and a plush 10cm thickness, the Cascade headboard brings a softness and a custom-built feel to any bedroom.

* Adjust any dotted-line dimension for $90 per ±10cm.
* Need something more custom? Chat with us in store.

QUEEN

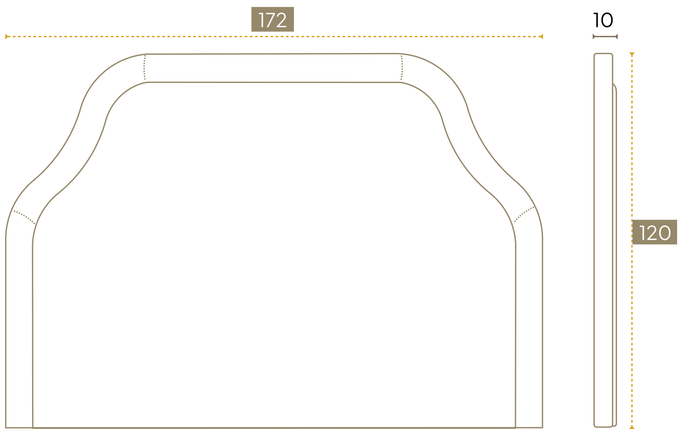

KING

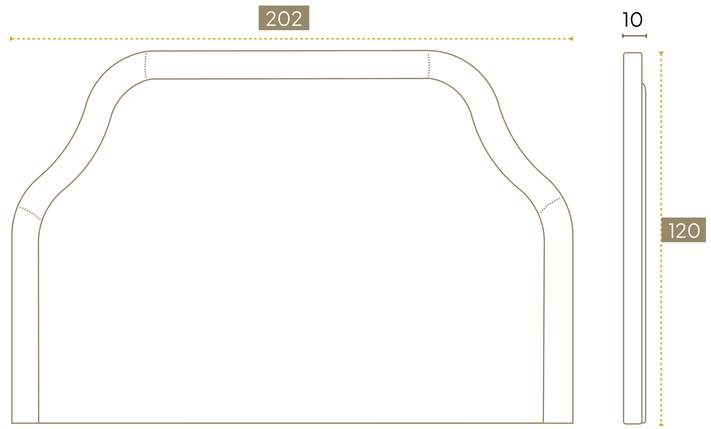

The Cascade headboard can also be customised to fit these mattress sizes:

EU Queen	: W160 x D200 cm
EU King	: W 180 x D200 cm
EU Super King	: W200 x D200cm

Contact our studio to get a quote.

Whatsapp : +65 8750 6522 Email : play@blafink.com

In house upholstery

Blafink's tightly curated range of upholstery favoured for speed, value and reliability.
For more variety, make an appointment to explore over 10,000+ materials at our studio.

Everyday Layers

Textured enough to be interesting, neutral enough to fit in anywhere. Everyday Layers features woven fabric with a soft melange effect.

100% Polyester | 30,000 Rubs | 400 g/m² | Water Repellent

Natural

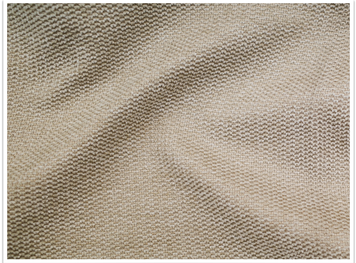
Ecru

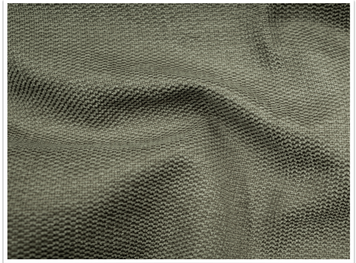
Pistachio

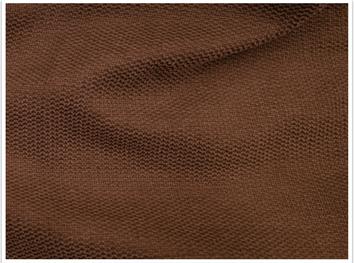
Terracota

Birch

Luxo

Like powder snow minus the sub zero temperature. This collection has a soft hand feel and modern colours.

100% Polyester | 50,000 Rubs | 380 g/m² | Water Repellent

Natural

Ecru

Birch

Ochre

Graphite

Pierret

This boucle-textured chenille invites the hand to linger. Its plush, furry softness whispers warmth into any space.

30% Recycled PET, 70% Polyester | 50,000 Rubs | 434 g/m²
Water Repellent

Ecru

Caramel

Sage

Whatsapp : +65 8750 6522

Email : play@blafink.com