BLAFINK

Together sofa

Together configurations

An original Blafink design, the Together Sofa is the pragmatic response to the reality of living with pets. Rather than fight your pets' natural instincts like scratching and nesting, this design integrates them thoughtfully in your life

* Adjust any dotted-line dimension for $120 per ±10cm.
* Need something more custom? Chat with us in store.

SEAT COMFORT : HIGH RESILIENCE FOAM

Soft — Firm

BACK COMFORT : POLYESTER FIBRE

Soft — Firm

STUDIO FIT - RIGHT

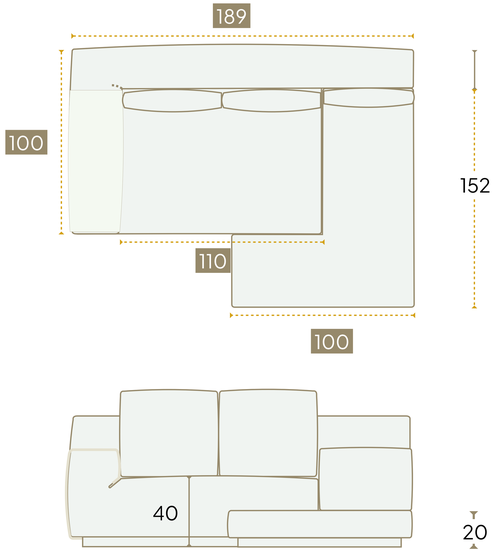

STUDIO FIT - LEFT

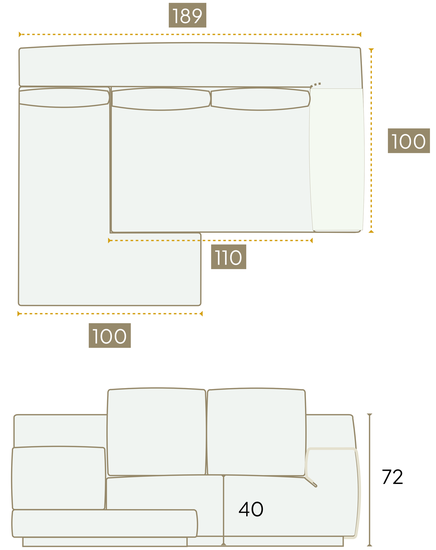

LOW PLATFORM - RIGHT

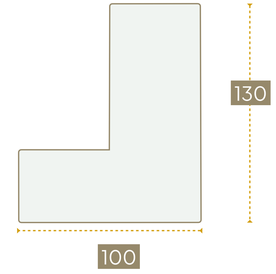

LOW PLATFORM - LEFT

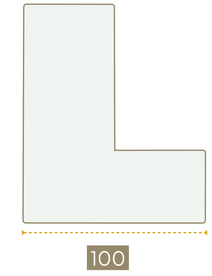

STUDIO FIT - NO PLATFORM

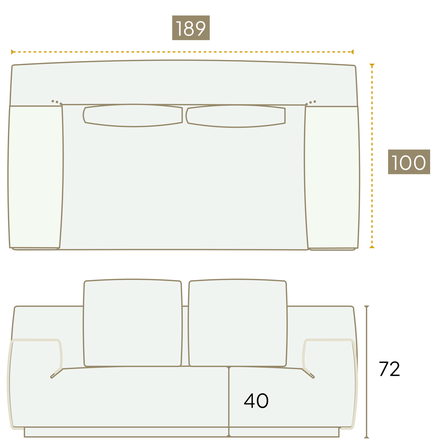

STUDIO - NO PLATFORM, LEFT ARM

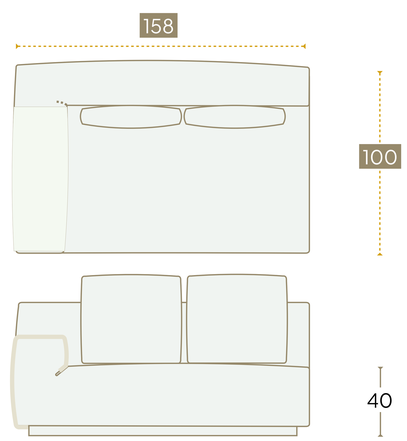

STUDIO - NO PLATFORM, RIGHT ARM

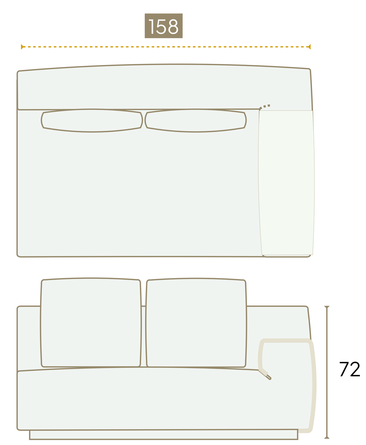

BLAFINK

Whatsapp : +65 8750 6522 Email : play@blafink.com

SIGNATURE STRETCH - RIGHT PLATFORM

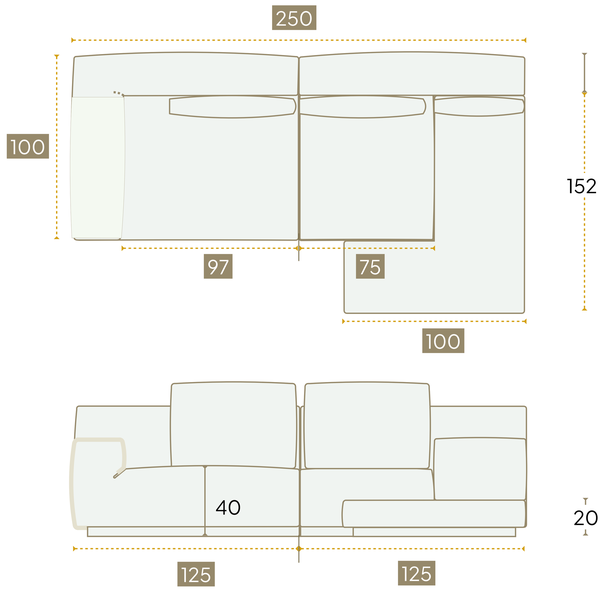

SIGNATURE STRETCH - LEFT PLATFORM

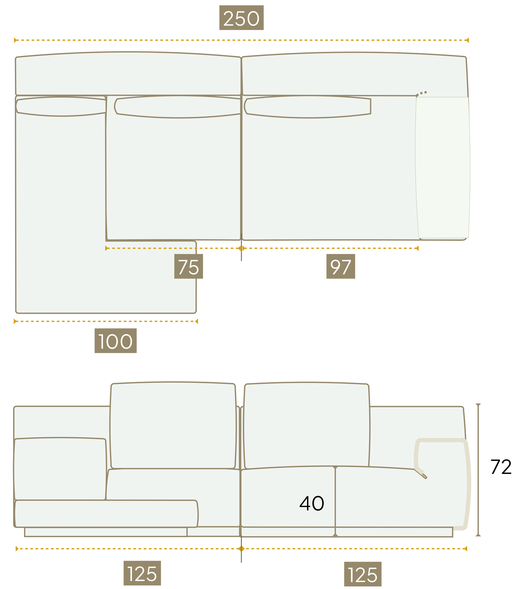

SIGNATURE STRETCH - CENTER PLATFORM, LEFT ARM

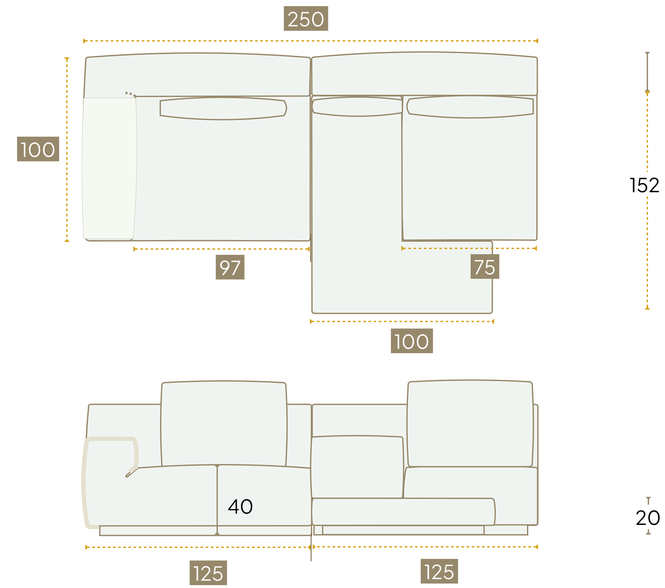

SIGNATURE STRETCH - CENTER PLATFORM, RIGHT ARM

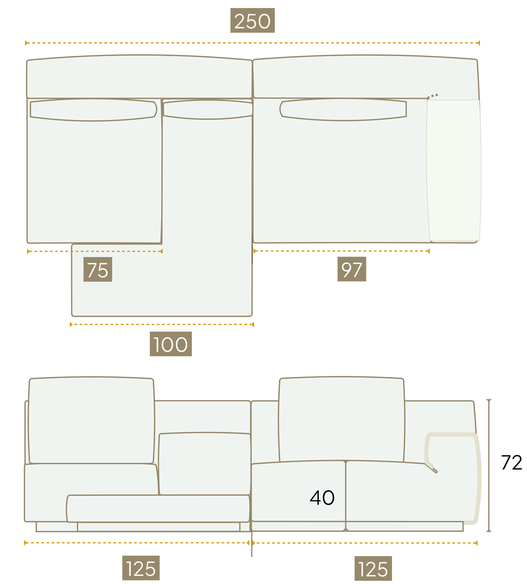

SIGNATURE STRETCH - NO PLATFORM

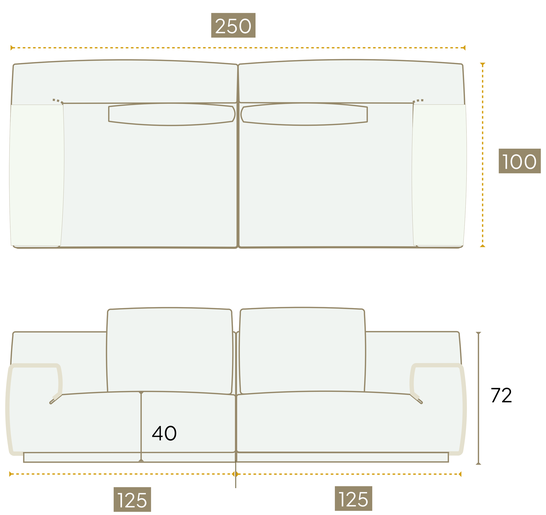

SIGNATURE - NO PLATFORM, LEFT ARM

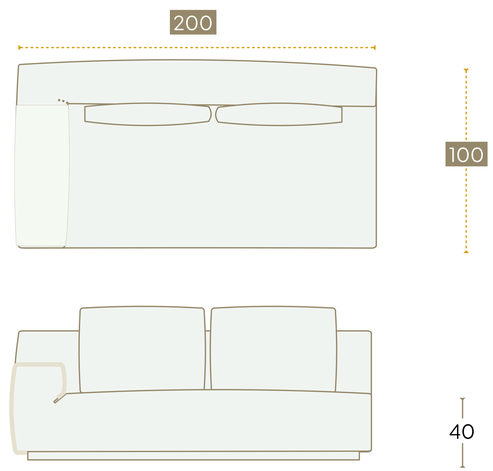

SIGNATURE - NO PLATFORM, RIGHT ARM

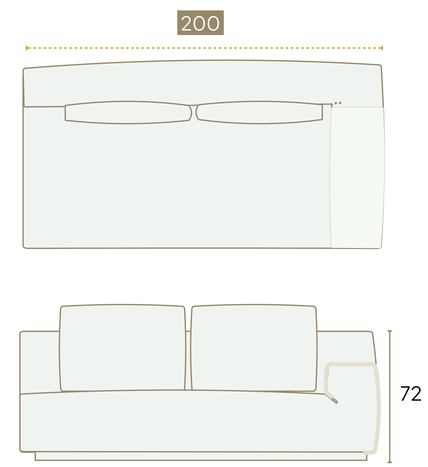

BLAFINK

Whatsapp : +65 8750 6522 Email : play@blafink.com

Pet friendly upholstery

Blafink's tightly curated and recommended range for pet friendly upholstery.
For more variety, make an appointment to explore over 10,000+ materials at our studio

Everyday pet weave

With a soft, matte hand feel, the Everyday Pet Weave fabric is our first recommendation for homes with pets, kids or chaos.

100% Polyester | 50,000 Rubs | 420 g/m²
Oeko Tex® Standard 100 certified, Scratch and water resistant

Natural

Sand

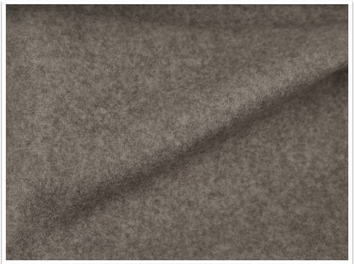
Birch

Grizzly

Terracota

Ochre

Olive

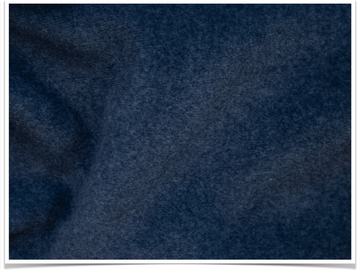
Nazy

Graphite

Pixel

Selected for guilt free scratching on the Together sofa, Pixel is a tightly woven fabric with loops and subtle colour differences creating a pixel effect.

100% Polyester | 40,000 Rubs | 400 g/m²
Water repellent, Tactile

Sand

Bronzite

Agate

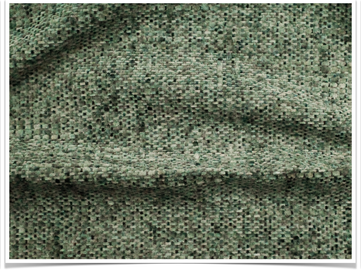
Peridot

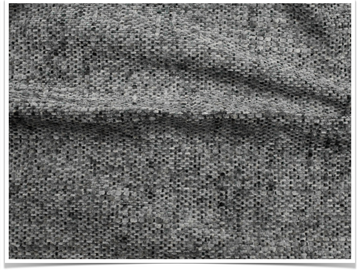
Quartz

BLAFINK

Whatsapp : +65 8750 6522

Email : play@blafink.com